BA-2074-00/03/06/07/13/13B
BIG AIR KIT - Kawasaki Vulcan 900 (All Models)

Revision: 2.6 - 04/02/2010
Install Time: 60 Minutes

CAUTION! We Strongly recommend that a qualified technician install this kit if you do not completely understand the instructions prior to the install.

INCLUDED IN THE KIT:

(1) Billet BAK Cover	(1) 1/2" ID Rubber Hose (18 1/2" length)
(1) Re-usable Performance Air Filter	(1) BAK Filter Raincoat
(1) Black BAK Backing Plate	(2) 1/4-28 x 1 13/16" Zinc Hex Bolts
(1) M5x10mm Button Head Screw	(2) Aluminum Spacers
(2) 1/4" Lock Washers	(1) Nylon Nipple Pre-installed

TOOLS REQUIRED:

3, 4 & 5 mm Allen Wrenches	10 & 12mm Sockets
Blue Loctite®	Phillips & Flat Screwdrivers
Pliers (Std. & Needle-nose)	Factory Kawasaki Service Manual

INSTRUCTIONS:

Please read all directions before starting this install. If at any time you are unsure or do not understand these procedures, please call us at the shop, or email tech@baronscustom.com for help. Although it is not required, the BAK may be easier to install after removing the fuel tank. Please make sure the vehicle is cool before starting your work.

1. Using a 4mm allen wrench, remove the 4 cap-head screws that hold the stock chrome air box cover on.

2. Using a phillips screwdriver, remove the screw at the top center of the air box. This holds the air filter on. Remove the air filter and plastic housing.

3. With a 5mm allen wrench, remove the 5 cap-head screws that hold the air box to the throttle body.

4. Remove the 2 bolts that were under the stock air filter with a 5mm allen wrench.

5. Remove the idle-speed adjuster from the air box, unplug the inlet temperature sensor, and remove the upper & lower vent tubes.

6. Remove the philips screw holding the sensor onto the stock air box. Install the sensor into BAK backing plate with the button head screw provided and the stock o-ring.

7. Remove the vent hose that leads to the air switching valve. Replace this hose with the 18-1/2" long hose provided. Be sure to run this hose behind the throttle body so it can be inserted onto the nipple on the BAK backing plate. A little WD-40® or thin grease on this fitting will help installing the hose provided.

Our install guides provide a basic outline on the proper installation of our products. Further tuning and/or fitment may be required. Barons bears no responsibility on installation costs associated with this product.
© 2013 Barons Custom Accessories

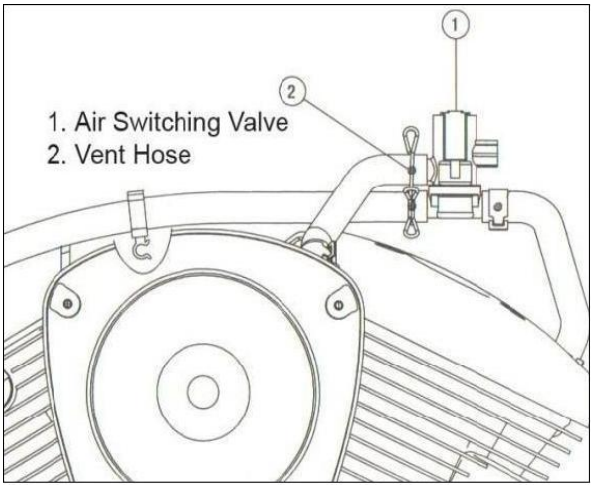

8. Plug connector back into temp sensor and insert remaining vent hose into the BAK backing plate. Be sure to use all the stock hose clamps.

9. Install one lock washer on each 1/4-28 zinc hex bolt and insert through backing plate. It may be easier at this step to tape the bolts in place from the back.

10. Fasten the BAK backing plate to the throttle body using the stock cap-head screws and a 5mm allen wrench. We recommend blue Loctite® on these screws.

11. Slide one aluminum filter spacer onto each of the zinc hex bolts in the center of the BAK backing plate.

12. Install performance air filter and place the BAK cover in place. Make sure the grooves in the filter, cover & backing plate all seal properly. Secure with 1/4-28 zinc hex bolts, lock washers and flat washers.

13. Clean outside of chrome BAK cover with a clean, soft cloth.

Our install guides provide a basic outline on the proper installation of our products. Further tuning and/or fitment may be required. Barons bears no responsibility on installation costs associated with this product.
© 2013 Barons Custom Accessories

5221 Oceanus Drive • Huntington Beach, CA 92649 • (925)583-2499 - Ph. • (714)901-0520 - Fax • www.baronscustom.com • tech@baronscustom.com